Murafdækning - model Standard
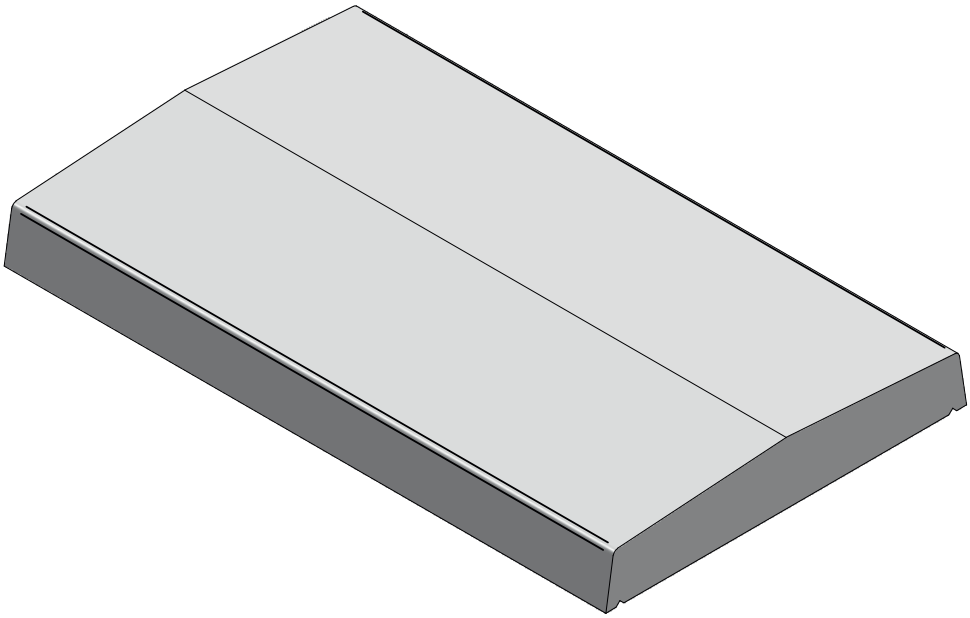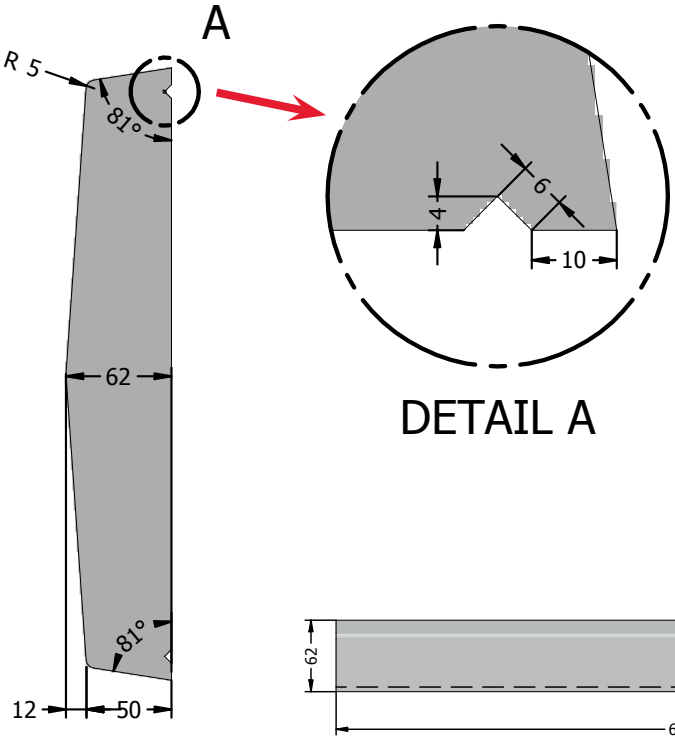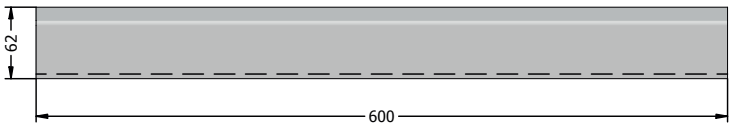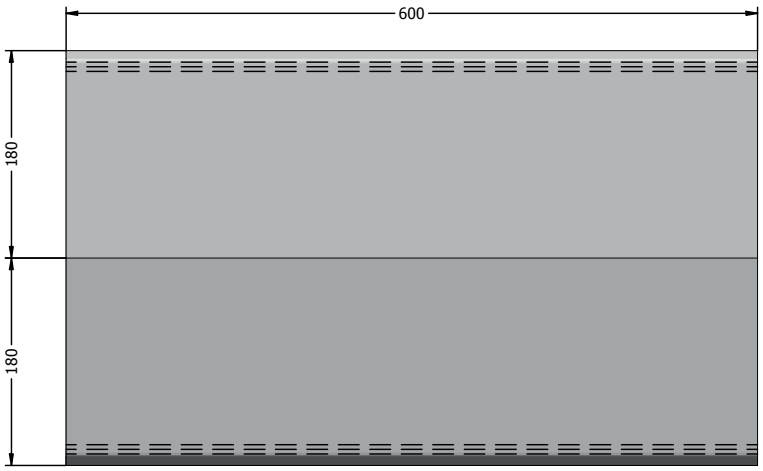
INDUSTRI BETON